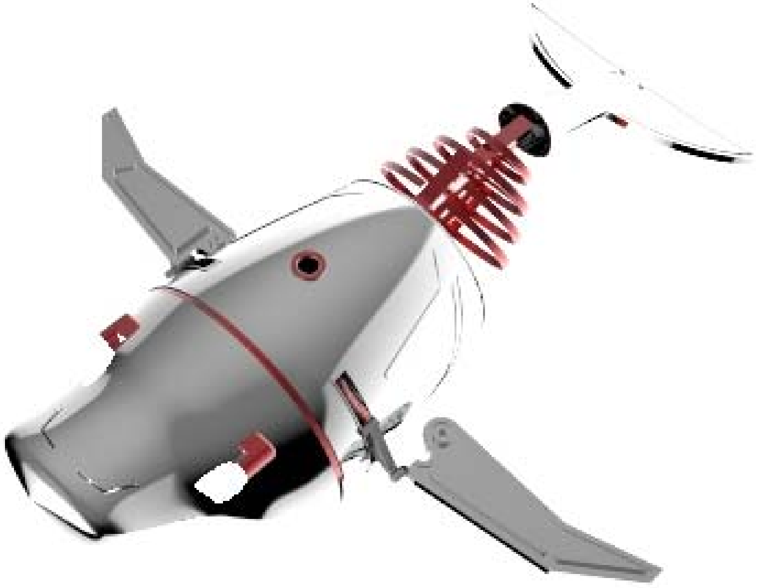

WHALE ROBOT in aquarium ; water purifying

2-1 CAD PROJECT - 불나방

PROF. MIN SEUNGJAE
2011012186 KIM DAEHYUN
2011012357 YEON KYUHWAN
2011012432 LEE HONGKYU

CONTEXT

Necessity for our work

Front part of model
with reference materials

Rear part of model
with reference materials

Summary , Q&A

Necessity for our work

01 How to clean aquarium?

Necessity for our work

02 In aquarium

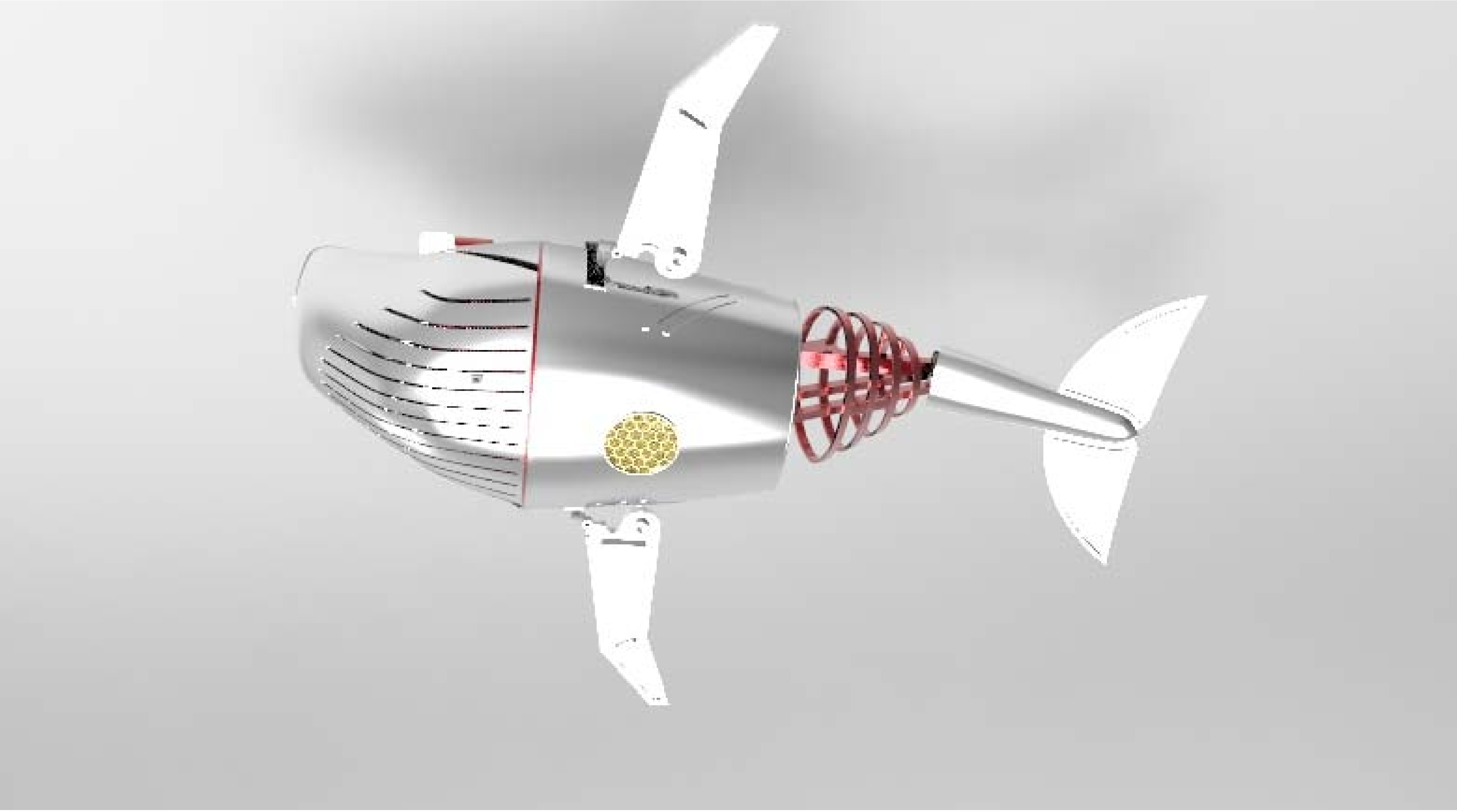

CONTEXT

Necessity for our work

Front part of model with reference materials

Rear part of model with reference materials

Summary , Q&A

Front part of model with reference materials

01 Battery

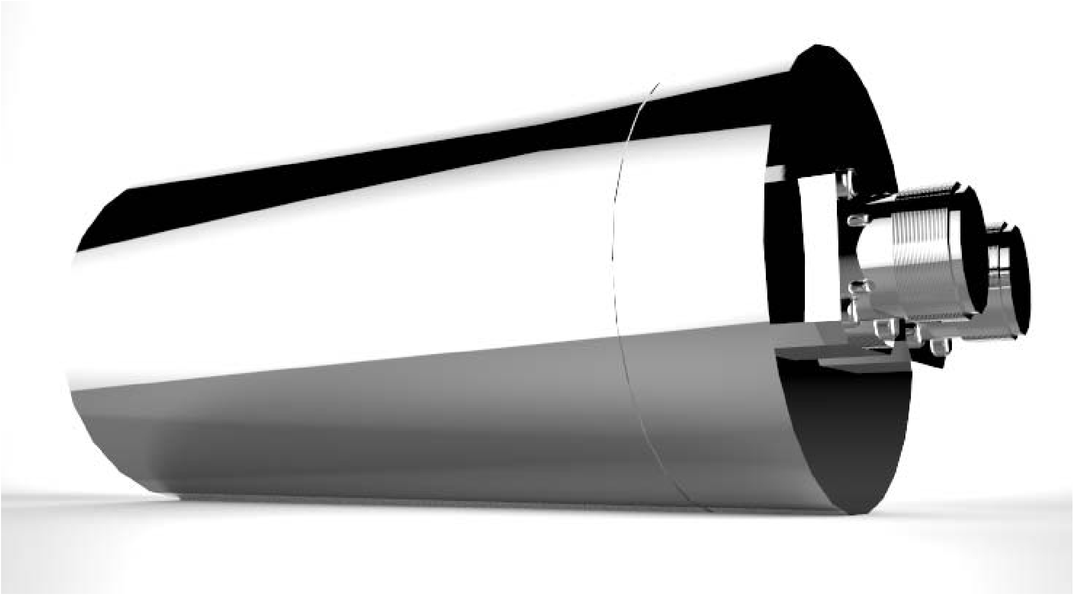

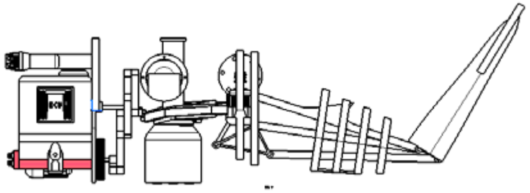

Front part of model
with reference materials

02 charging system; kinematics

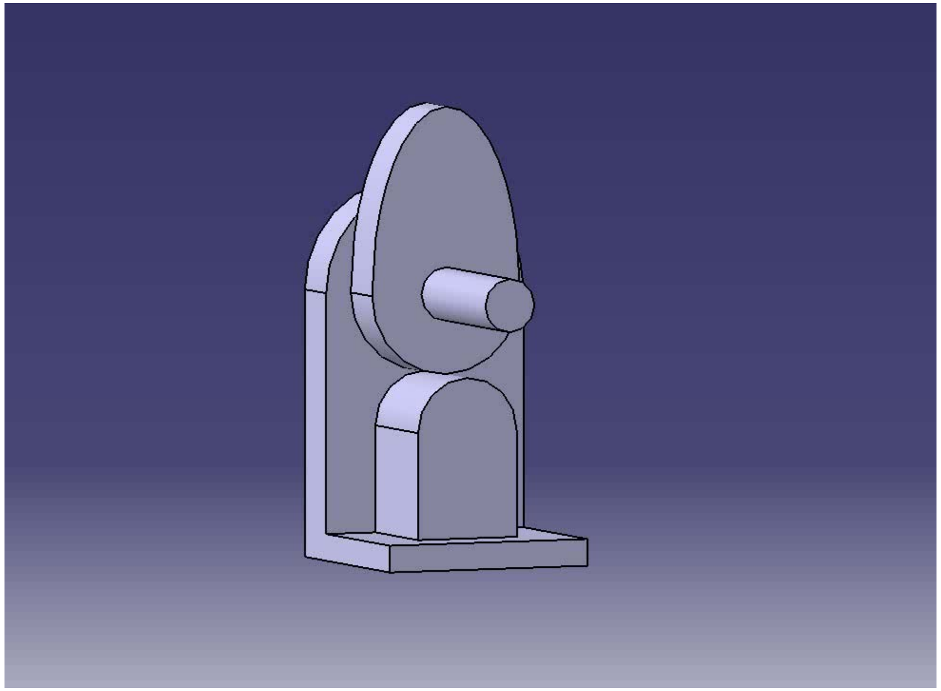

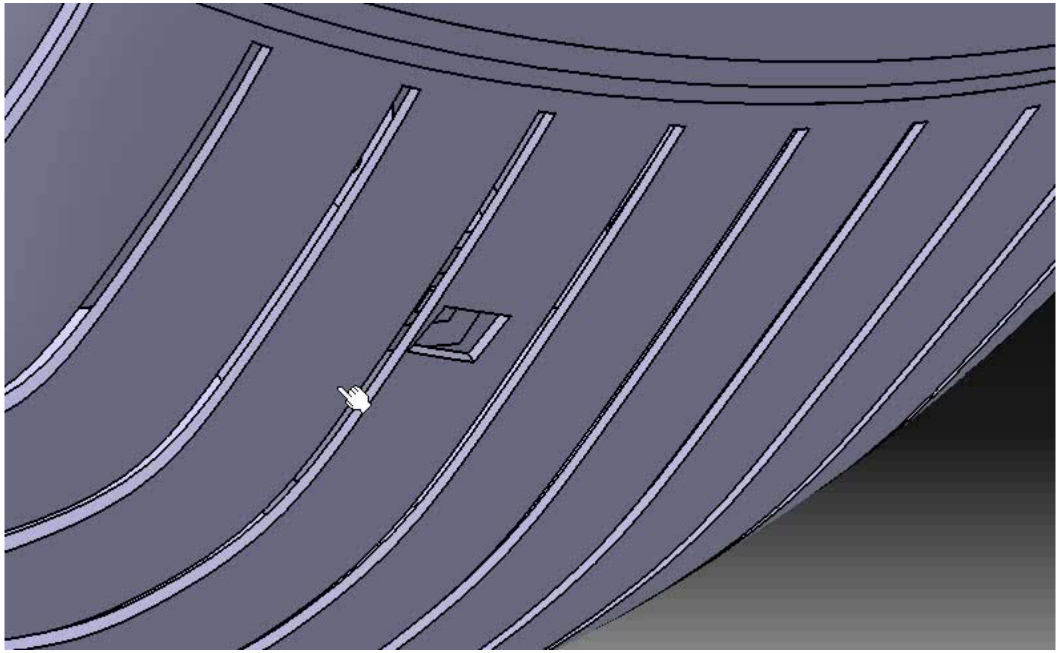

prismatic joint, revoulte joint + slide curve

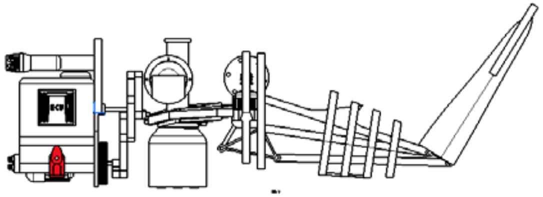

Front part of model with reference materials

03 ECU

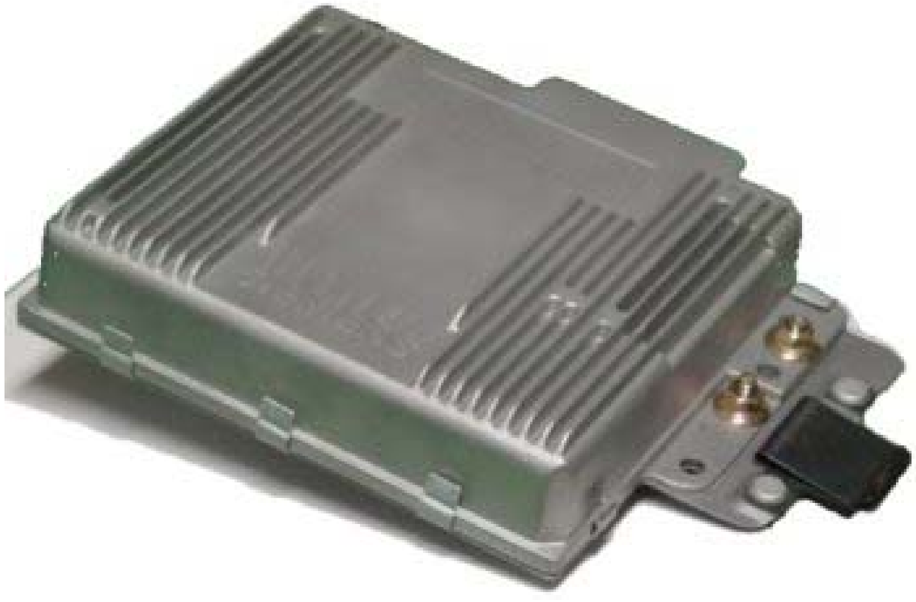

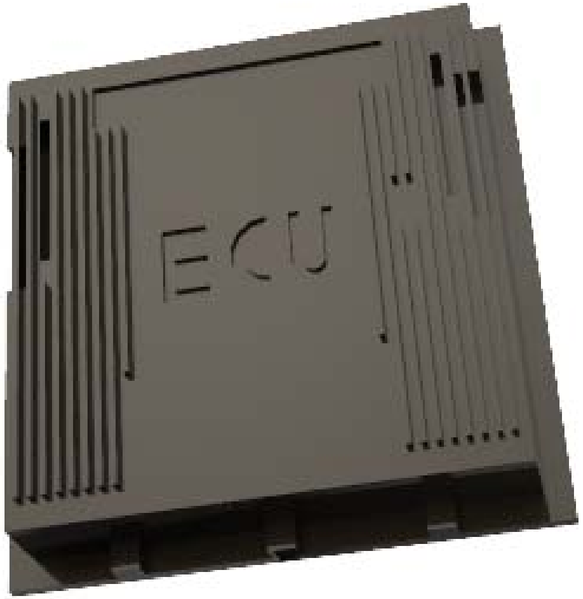

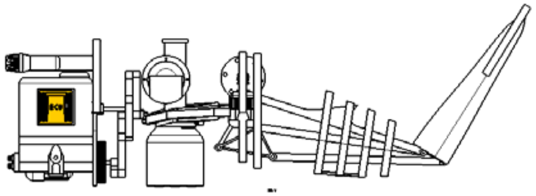

Front part of model with reference materials

04 Air compressor

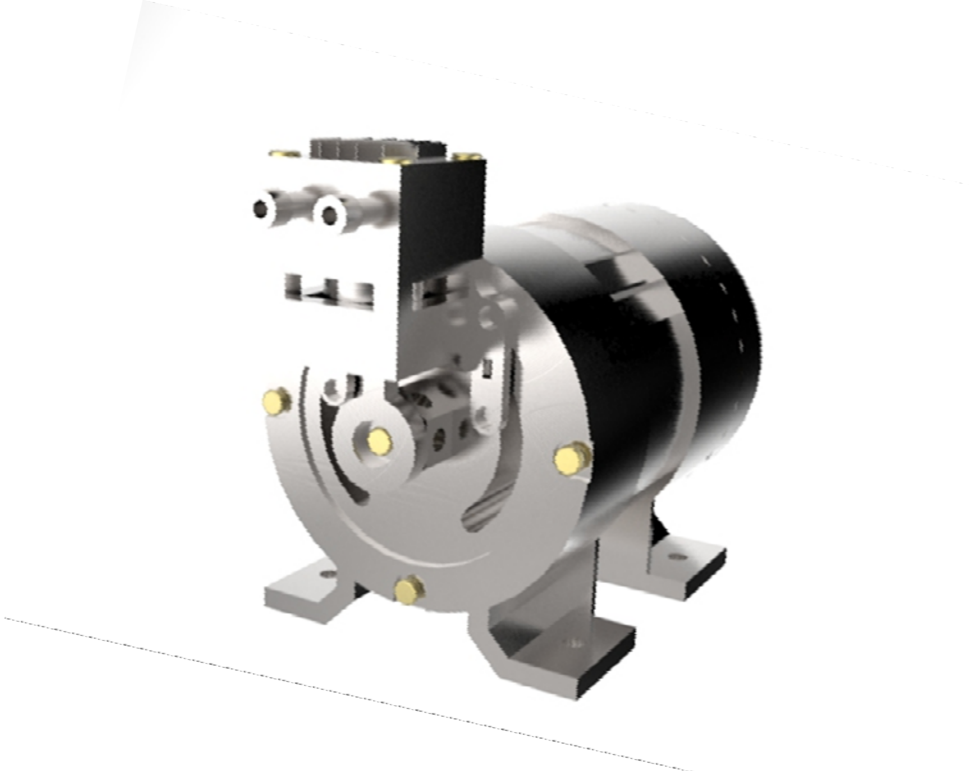

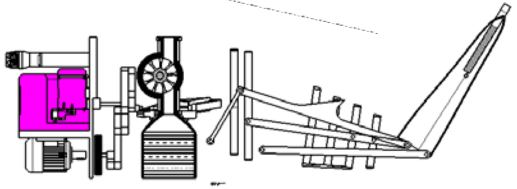

Front part of model with reference materials

05 Air bladder

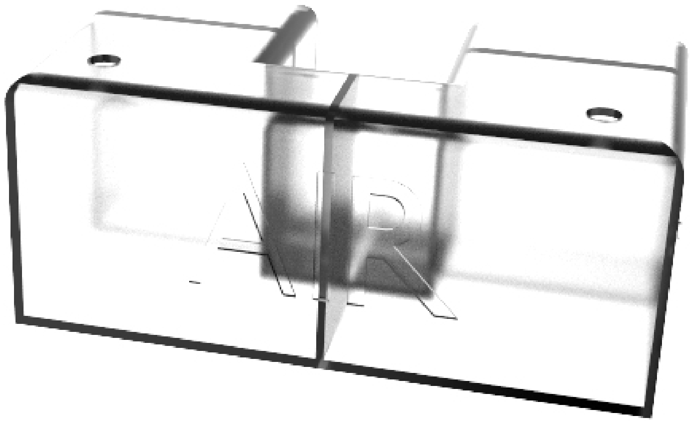

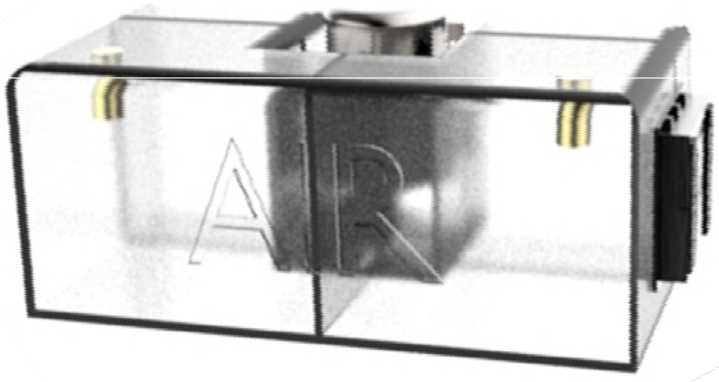

Front part of model with reference materials

06 Air bladder system

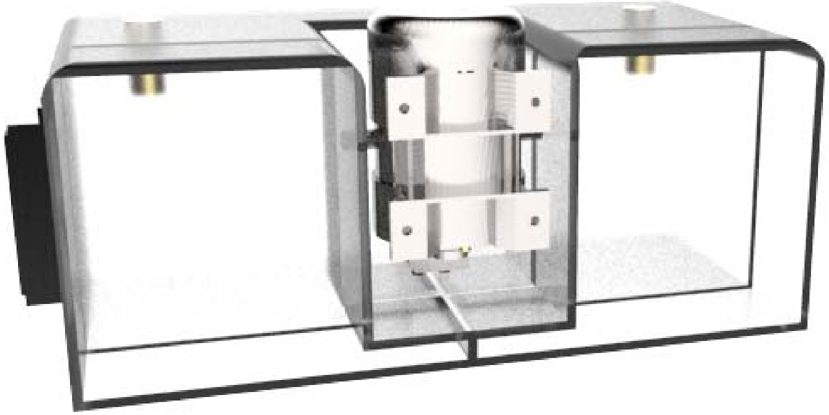

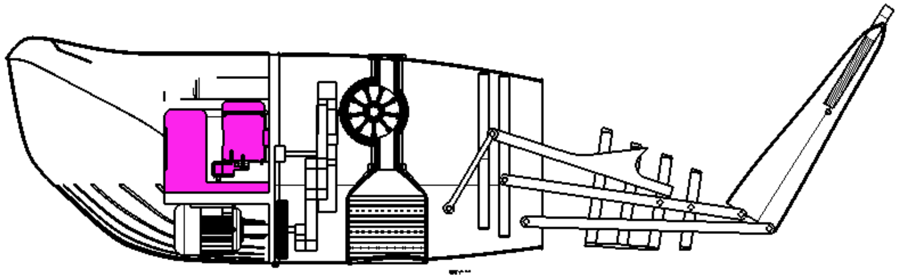

Front part of model with reference materials

07 Eye

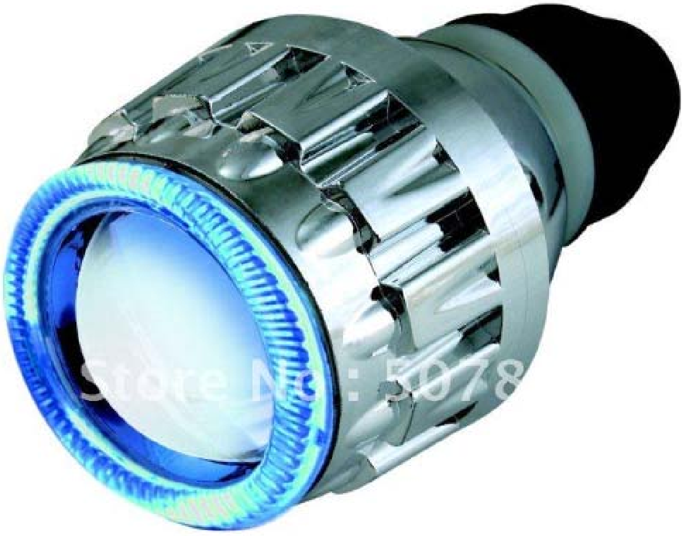
Store No.: 5078

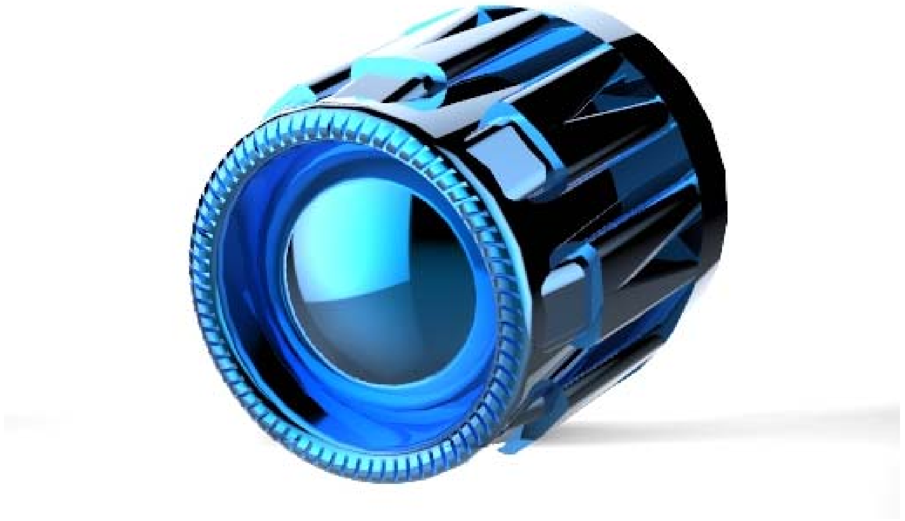

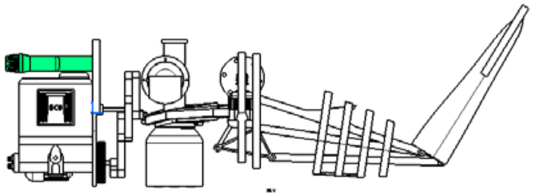

Front part of model
with reference materials

08 filter

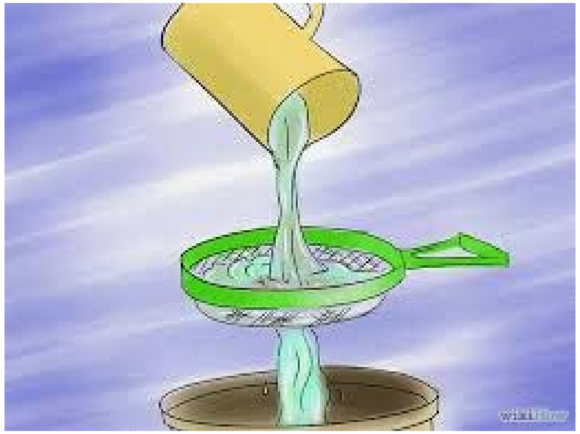

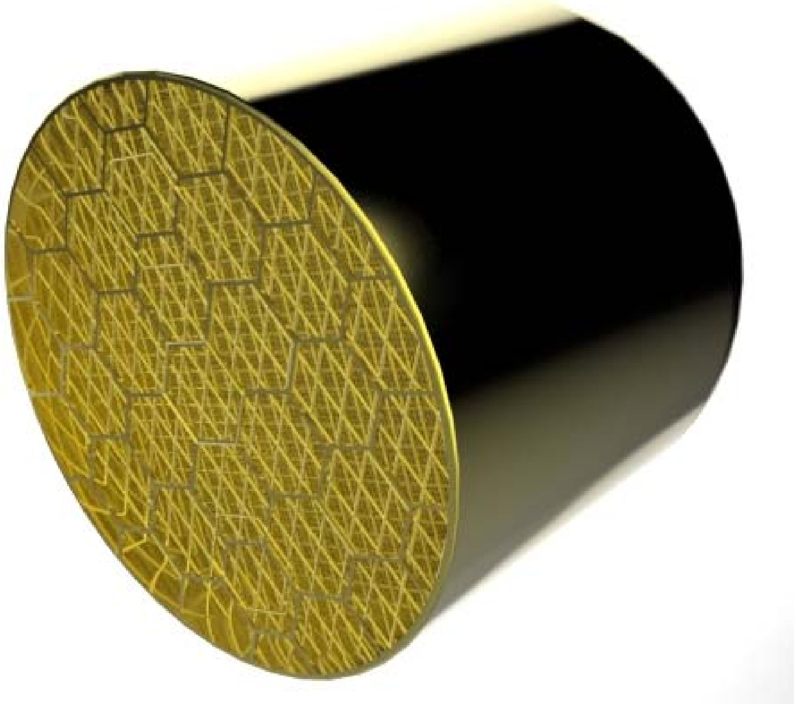

Front part of model with reference materials

09 Impeller pump

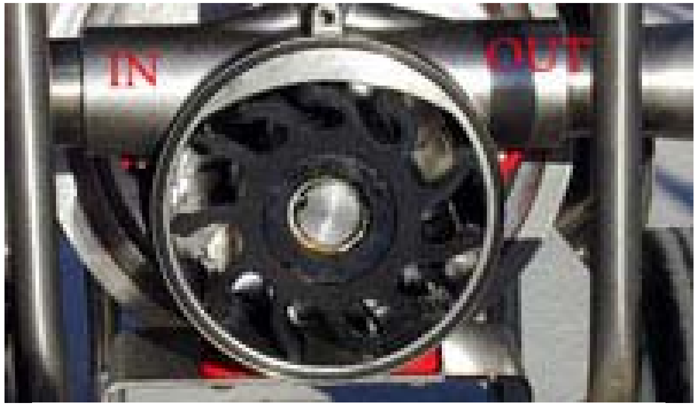

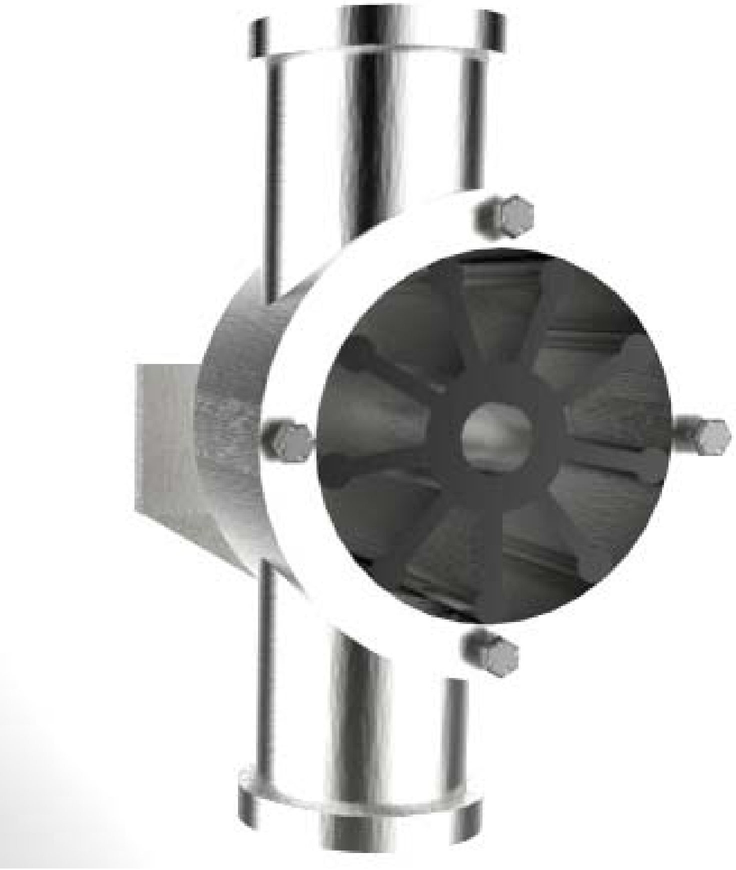

Front part of model
with reference materials

10 impeller pump; kinematics

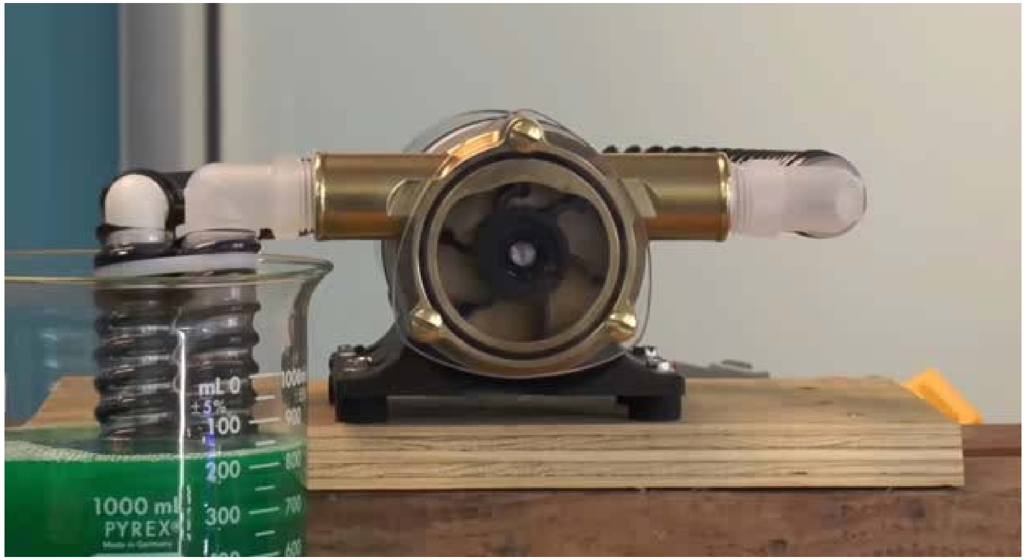
mL 0
±5%
100
200
300
1000 ml
PYREX

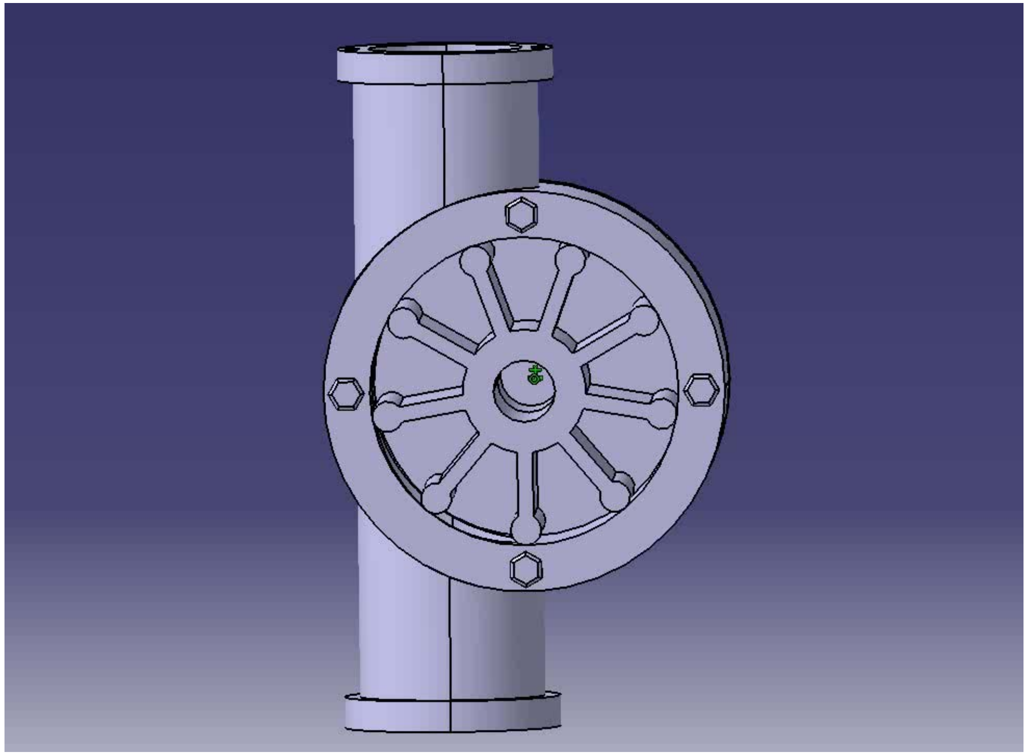

Revoulte joint in law

Front part of model with reference materials

11 filter system

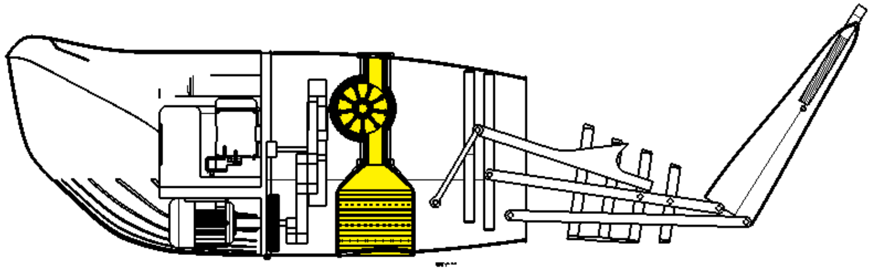

CONTEXT

Necessity for our work

Front part of model
with reference materials

**Rear part of model
with reference materials**

Summary , Q&A

Rear part of model with reference materials

01 Motor

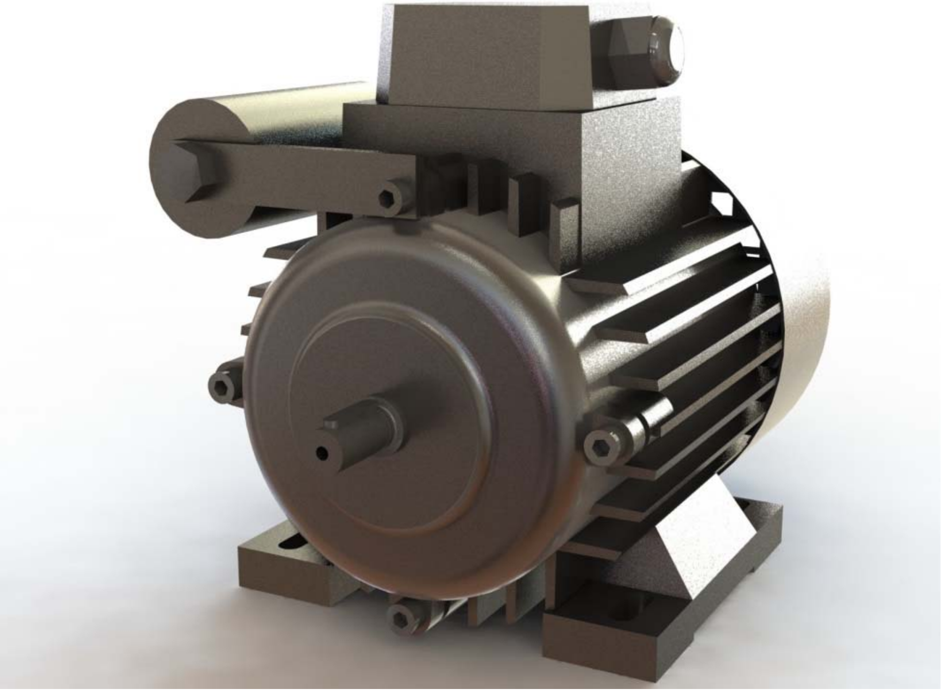

Rear part of model
with reference materials

02 tail; kinematics

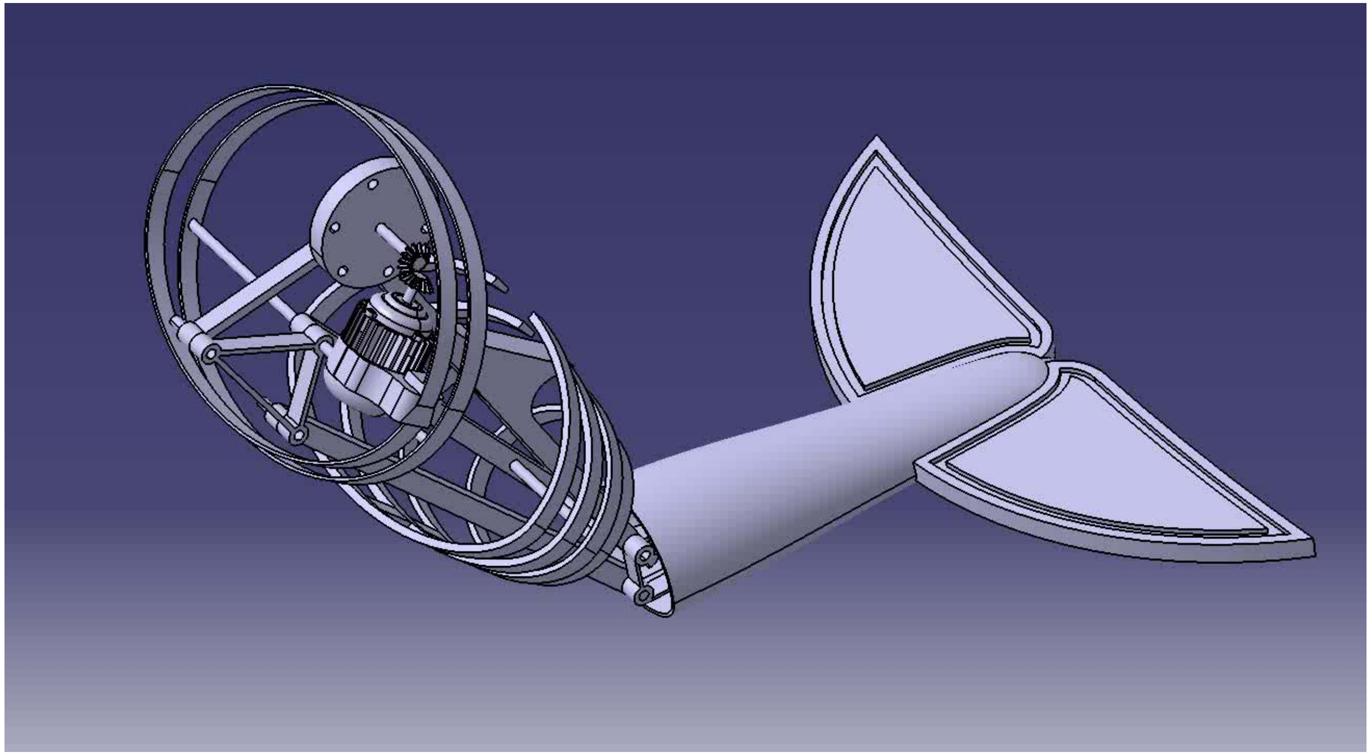

Kinematic chain

*Bevel gear

crank 1
rocker 2
coupler 4 >link 8 (ground is counted)
ground 1
joint 10

DOF = 24 - 20 - 3 = 1

Ground revoulte joint's DOF = 1
So DOF is zero

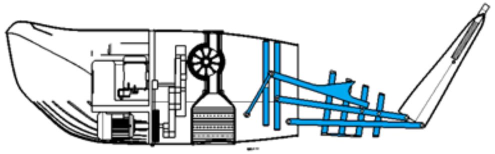

Rear part of model
with reference materials

03 wing; kinematics

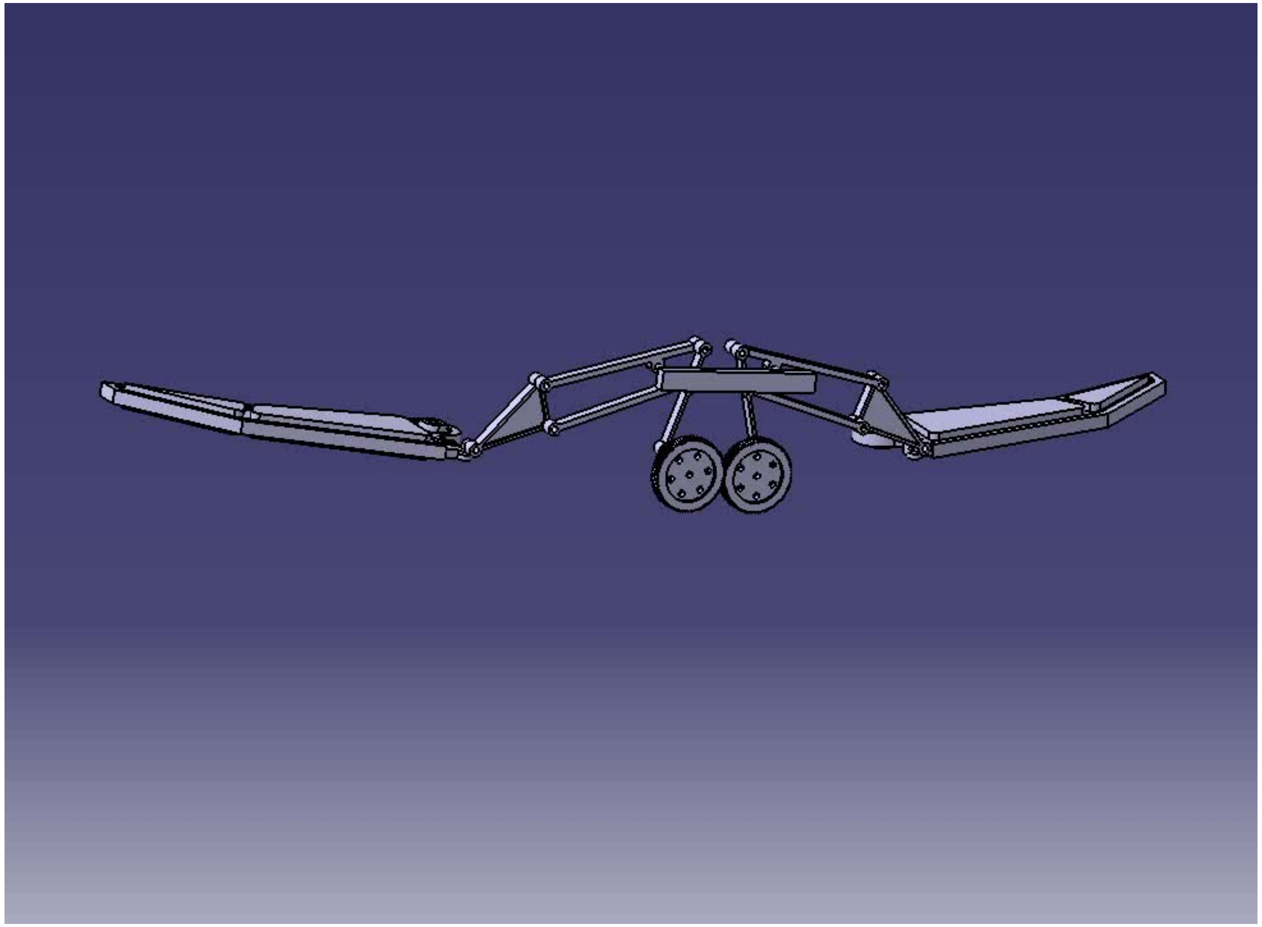

Kinematic chain

One side of wing

rocker1
coupler3 >link 6 (ground is counted)
ground 1
joint 7

DOF = 3Link -2Joint -3Ground = 18 - 14 - 3 = 1

revoulte joint's DOF is 1

So DOF is zero

Connect with gear joint to the other side

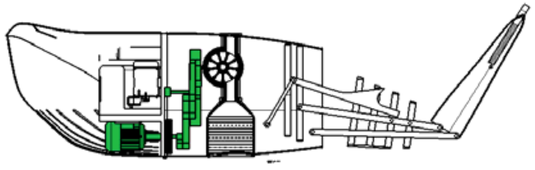

CONTEXT

Necessity for our work

Front part of model
with reference materials

Rear part of model
with reference materials

Summary , Q&A